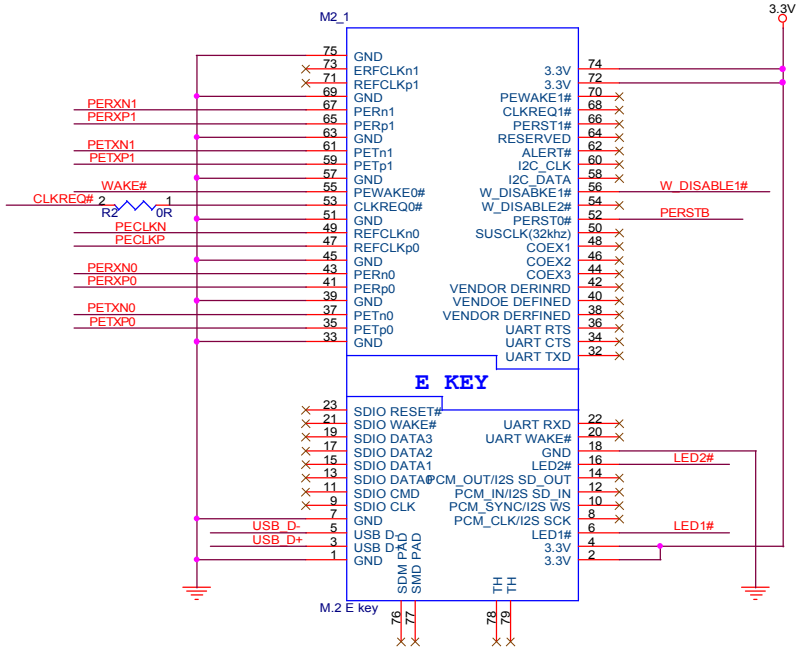


| | | |
|---|---|---|
| Title | <Title> | |
| Size Custom | Document Number <Doc> | Rev <RevCode> |
| Date: Wednesday, March 07, 2018 | Sheet 1 of 1 | |